DIMENSIONAL REPORT

Report Author: W. Edwards Deming
Date: 01/01/2020

MODELO DE RELATÓRIO

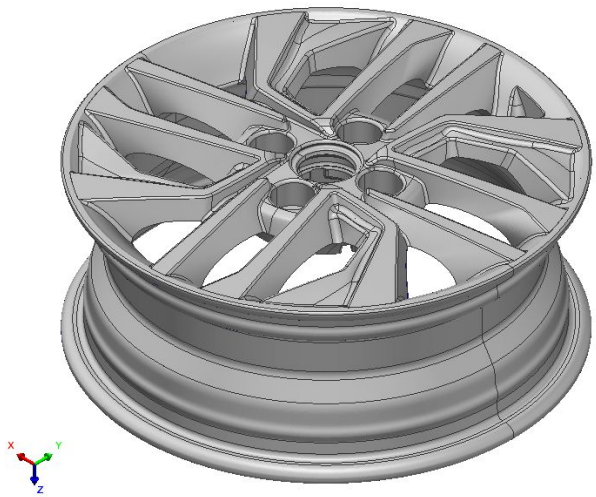

Nossos Serviços
- Análise e Inspeção Dimensional
- Simulação e Montagem Virtual de Componentes
- Escaneamento a Laser
- Engenharia Reversa
- Impressão 3D e Prototipagem
- Consultoria e Treinamentos
- Relatórios de PPAP, Estudos de MSA, Análise de CEP.

Organization:	Otimizare	Production Date:	01/01/2020
Operator:	Walter A. Shewhart	Time Production:	17:05
Part name:	Wheel	Production Order:	01/2020
Part number:	52966_01	Injection Mold:	14025
Sequence Part :	piece 1	Machine:	Scan Arm 7125SI

Alignment from reference datum - plane, axis, center point

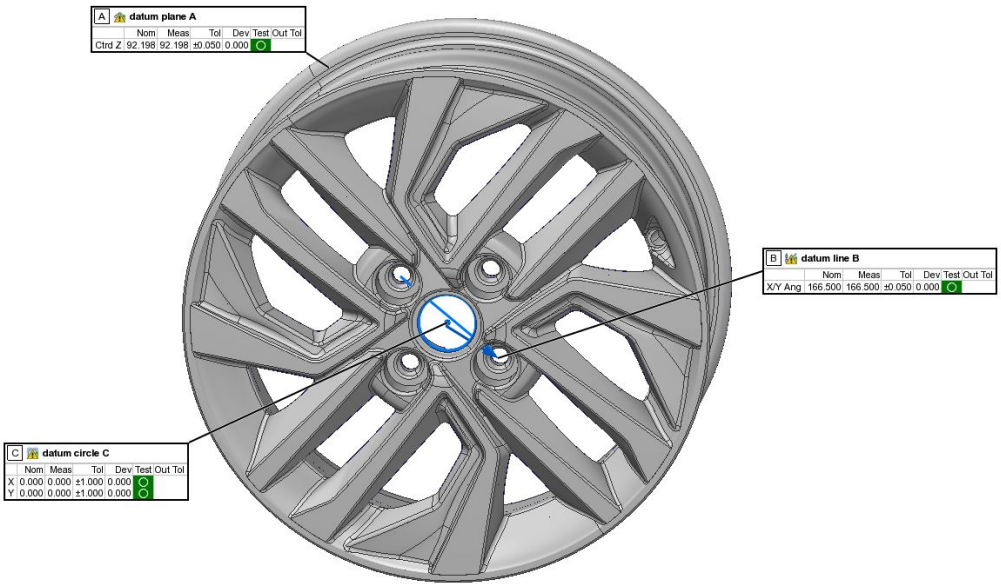

Analysis from feature and surface point

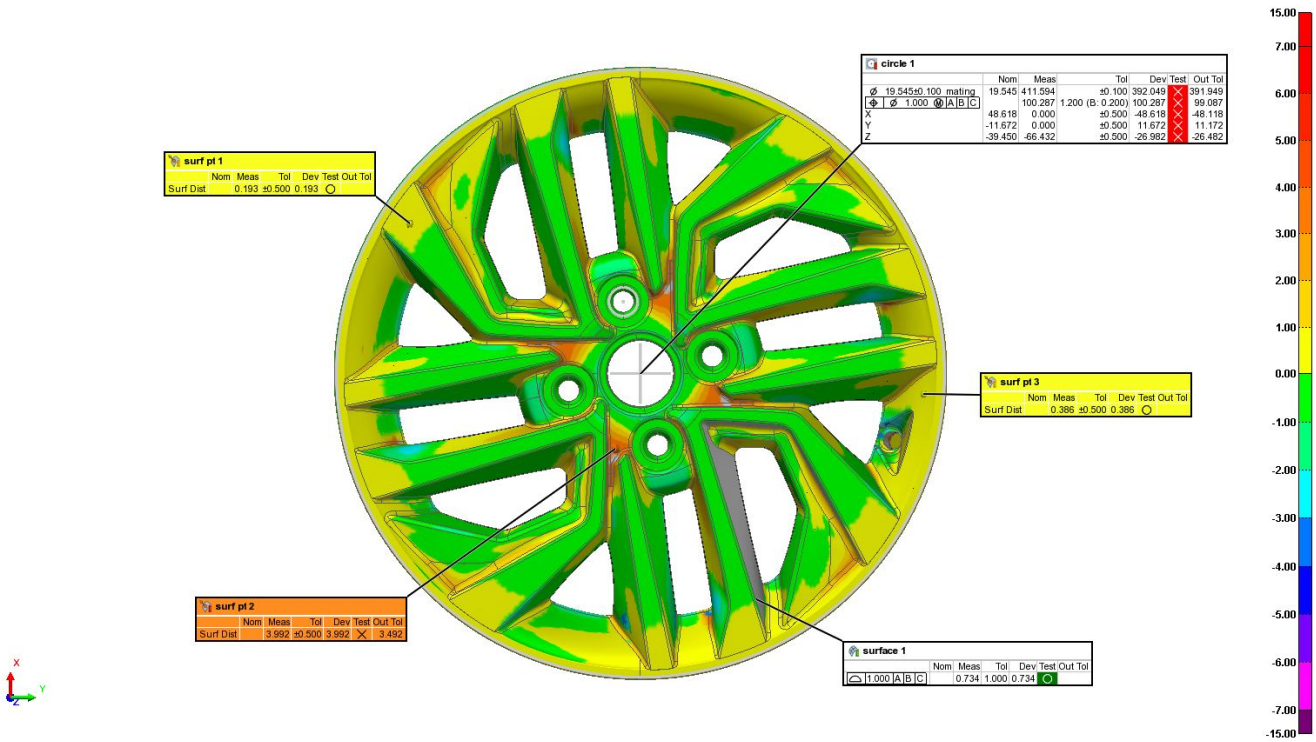

Organization:	Otimizare	Part name:	Wheel
Operator:	Walter A. Shewhart	Part number:	52966_01
E-mail:	contato@otimizare.com	Piece:	piece 1

Analysis from feature and surface point

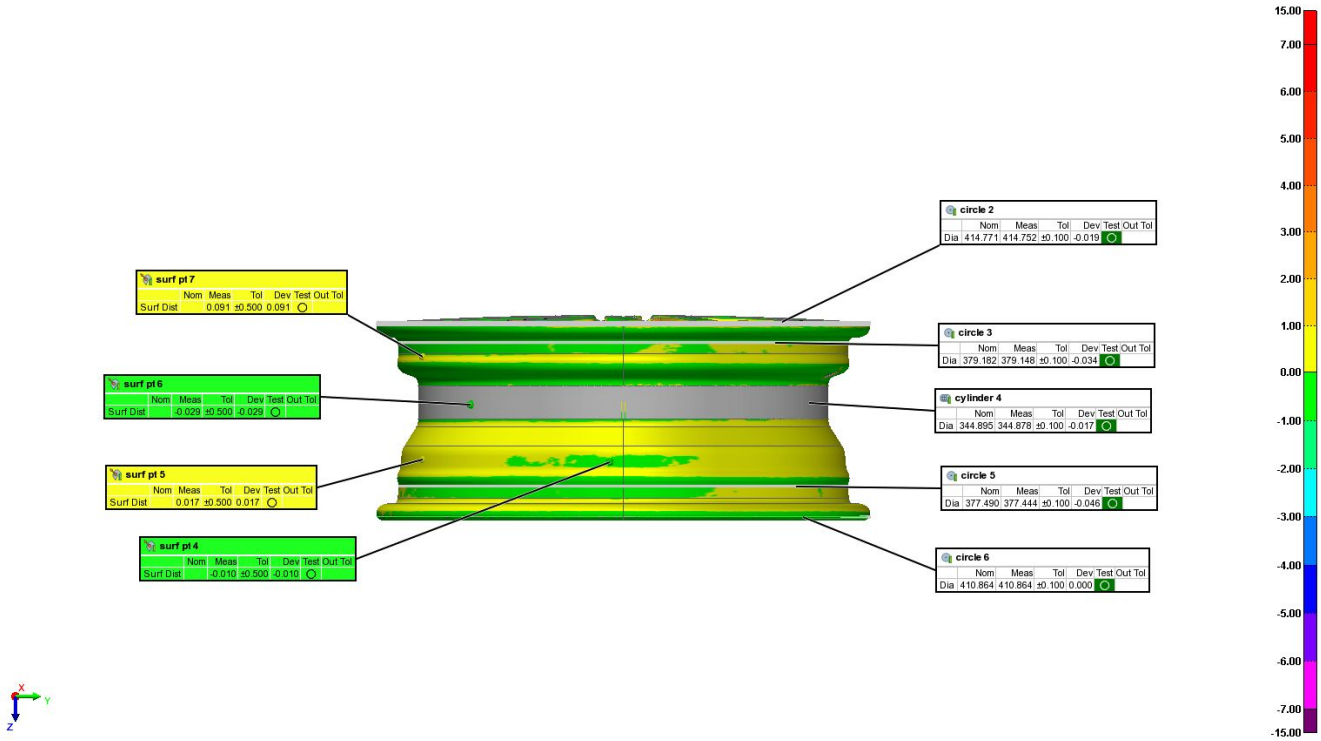

Analysis from deviation vector

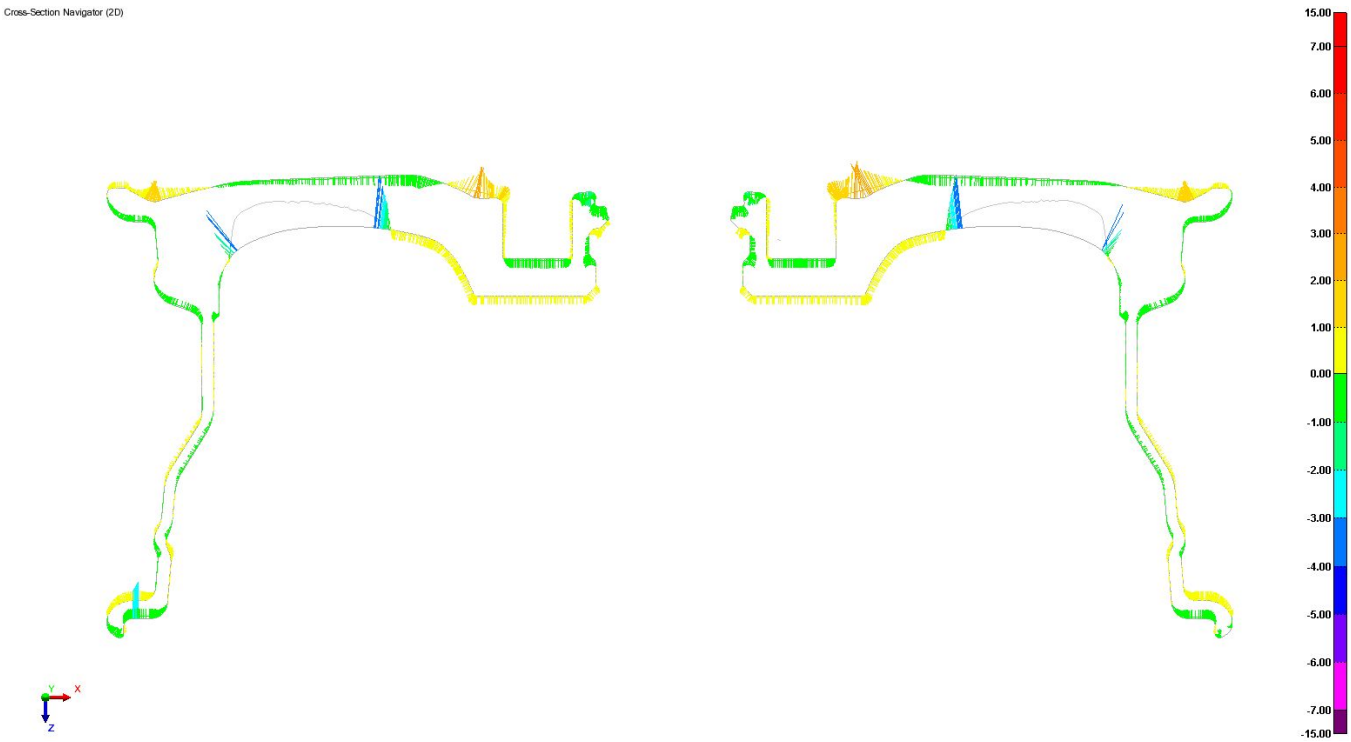

Organization:	Otimizare	**Part name:**	Wheel
Operator:	Walter A. Shewhart	**Part number:**	52966_01
E-mail:	contato@otimizare.com	**Piece:**	piece 1

Analysis from 2D dimensional

Create Cross-section Features (2D)

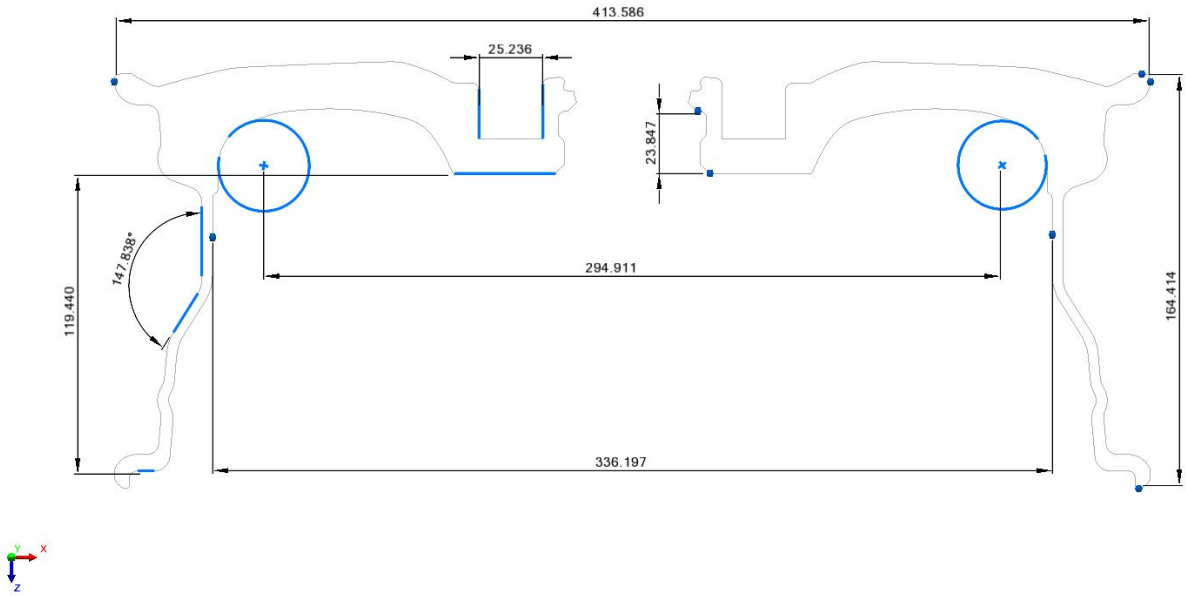

Analysis from data color map

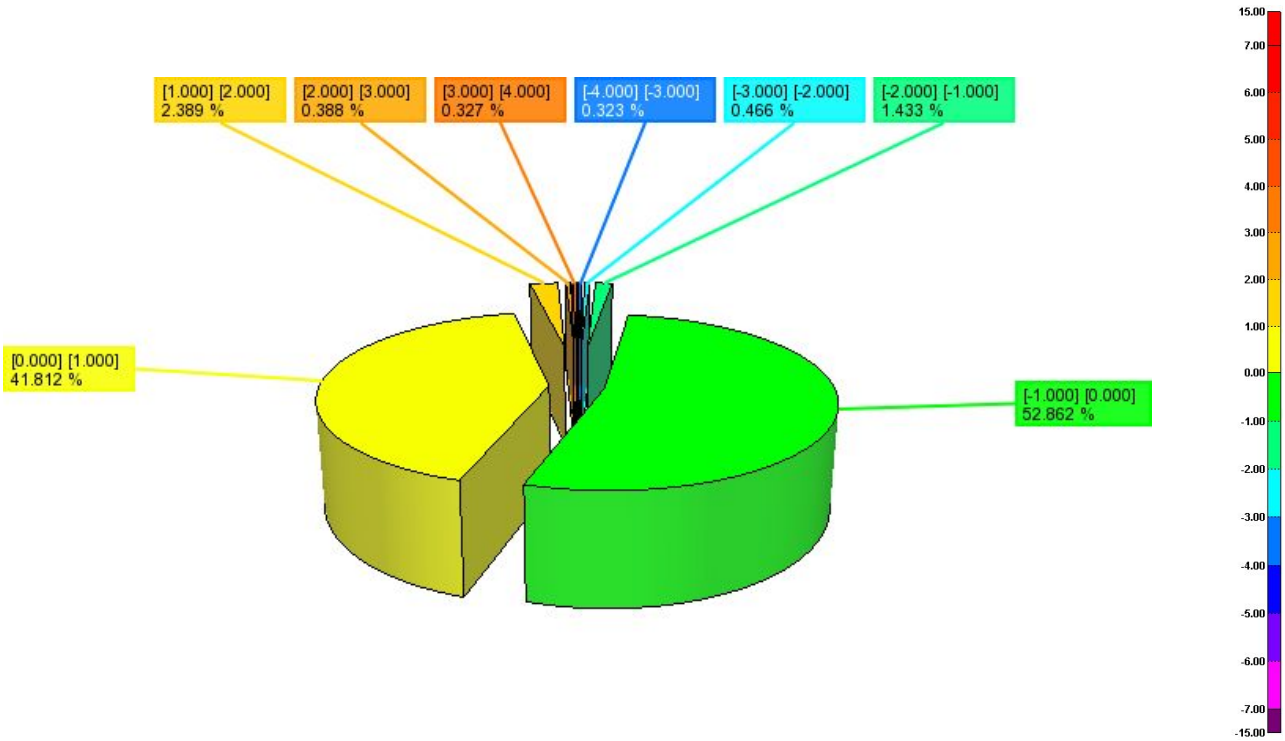

Organization:	Otimizare	**Part name:**	Wheel
Operator:	Walter A. Shewhart	**Part number:**	52966_01
E-mail:	contato@otimizare.com	**Piece:**	piece 1

Control View

Control View Name	control view 1
Units	Millimeters
Coordinate Systems	world
Data Alignments	best-fit to ref 1
All Statistics	Total: 25, Measured: 25 (100.000%), Pass: 16 (64.000%), Fail: 9 (36.000%), Warning: 2 (8.000%)

Char No.	Object Name	Control	Nom	Meas	Tol	Dev	Test	Out Tol
	circle 1	Ø 19.545±0.100 mating	19.545	411.594	±0.100	392.049	Fail	391.949
	circle 1	⌖ Ø 1.000 Ⓜ A B C		100.287	1.200 (B: 0.200)	100.287	Fail	99.087
	circle 1	X	48.618	0.000	±0.500	-48.618	Fail	-48.118
	circle 1	Y	-11.672	0.000	±0.500	11.672	Fail	11.172
	circle 1	Z	-39.450	-66.432	±0.500	-26.982	Fail	-26.482
	surface 1	⌓ 1.000 A B C		0.734	1.000	0.734	Pass	
	cylinder 4	Diameter	344.895	344.878	±0.100	-0.017	Pass	
	circle 3	Diameter	379.182	379.148	±0.100	-0.034	Pass	
	circle 5	Diameter	377.490	377.444	±0.100	-0.046	Pass	
	circle 2	Diameter	414.771	414.752	±0.100	-0.019	Pass	
	circle 6	Diameter	410.864	410.864	±0.100	0.000	Pass	
	distance 1	X Distance	336.211	336.197	±1.000	-0.014	Pass	
	distance 2	Z Distance	165.914	164.414	±1.000	-1.500	Fail	-0.500
	distance 3	Z Distance	24.945	23.847	±1.000	-1.098	Fail	-0.098
	distance 4	X Distance	25.671	25.236	±1.000	-0.435	Pass	
	distance 5	X Distance	295.690	294.911	±1.000	-0.779	Pass	
	distance 7	Z Distance	118.952	119.440	±1.000	0.488	Pass	
	distance 6	X Distance	414.877	413.586	±1.000	-1.291	Fail	-0.291
	surf pt 1	Surface Distance		0.193	±0.500	0.193	Pass	
	surf pt 2	Surface Distance		3.992	±0.500	3.992	Fail	3.492
	surf pt 3	Surface Distance		0.386	±0.500	0.386	Pass	
	surf pt 4	Surface Distance		-0.010	±0.500	-0.010	Pass	
	surf pt 5	Surface Distance		0.017	±0.500	0.017	Pass	
	surf pt 6	Surface Distance		-0.029	±0.500	-0.029	Pass	
	surf pt 7	Surface Distance		0.091	±0.500	0.091	Pass	

Organization:	Otimizare	Part name:	Wheel
Operator:	Walter A. Shewhart	Part number:	52966_01
E-mail:	contato@otimizare.com	Piece:	piece 1

REVERSE ENGINEERING PROCESS

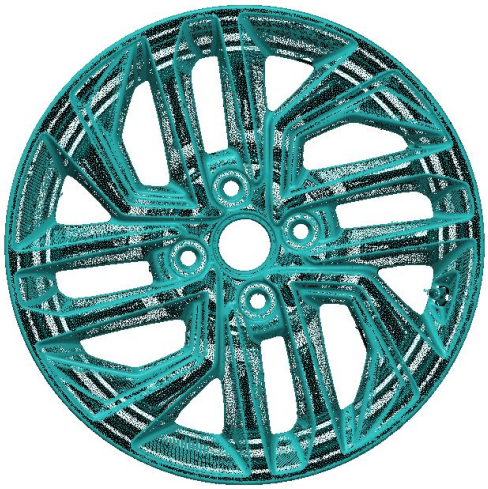

A primeira etapa é realizar a digitalização do modelo físico através de laser scan 3D. O resultado obtido é chamado de nuvem de ponto ou malha.

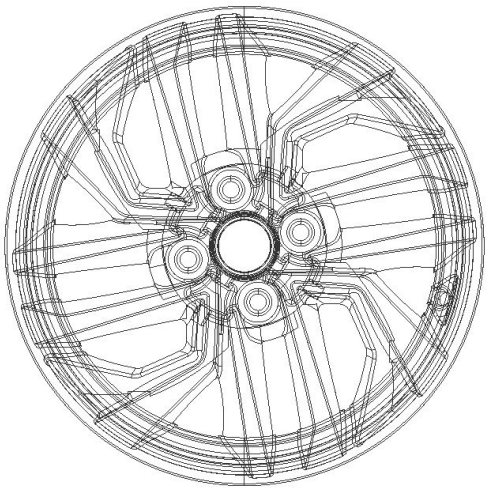

Posteriormente é realizado um sketch do modelo, utilizando o modelo escaneado.

Utilizando o sketch e o modelo poligonal, o modelo é desenhado através de software de modelagem dedicado.

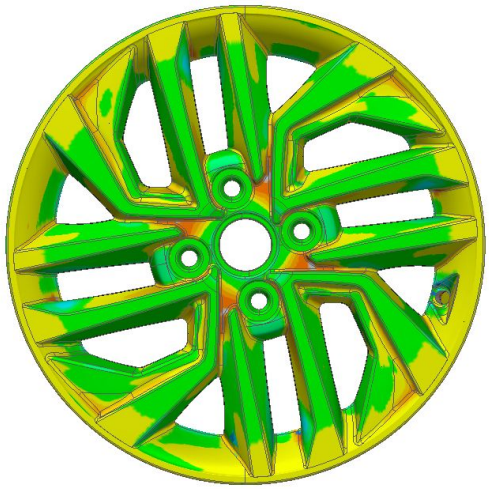

Após o modelo finalizado, utilizamos o comparativo entre malha e modelo 3D para verificar o dimensional do modelo, fazendo ajustes se necessário, para garantir assim precisão do projeto.

Organization:	Otimizare	**Part name:**	Wheel
Operator:	Walter A. Shewhart	**Part number:**	52966_01
E-mail:	contato@otimizare.com	**Piece:**	piece 1